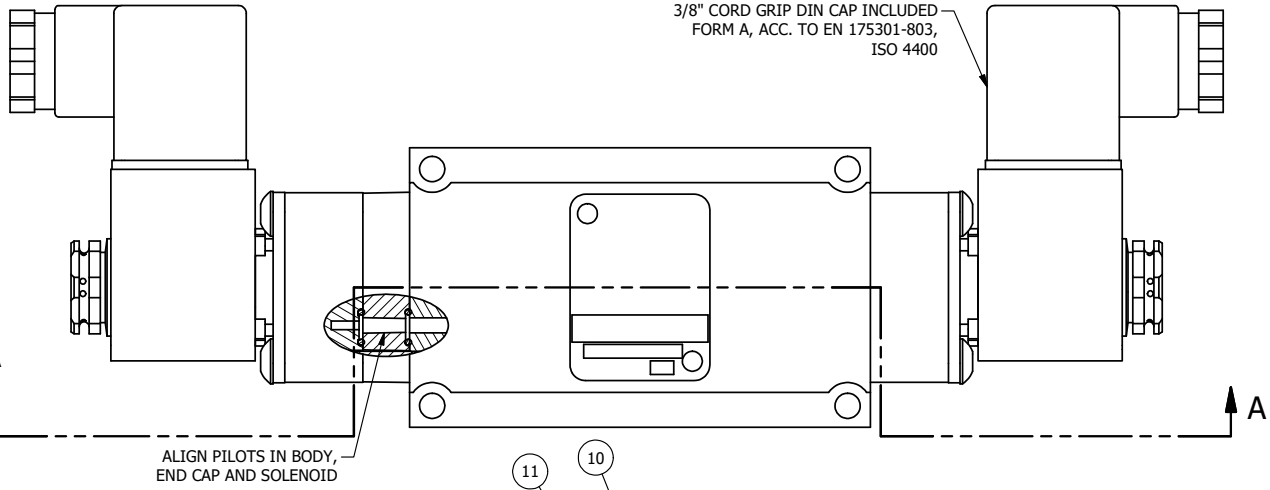

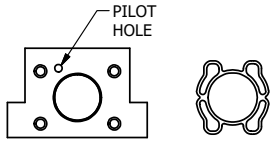

ALIGN PILOT AND SLOT IN ADAPTOR
WITH GASKET IN BETWEEN, BOTH SIDES.
FOR EXTERNAL PILOT OPERATION - ROTATE ADAPTOR
180 DEGREES. REMOVE 1/8" NPTF PLUG AND
SUPPLY 50-150 PSI TO 1/8" NPTF PILOT PORT IN ADAPTOR.

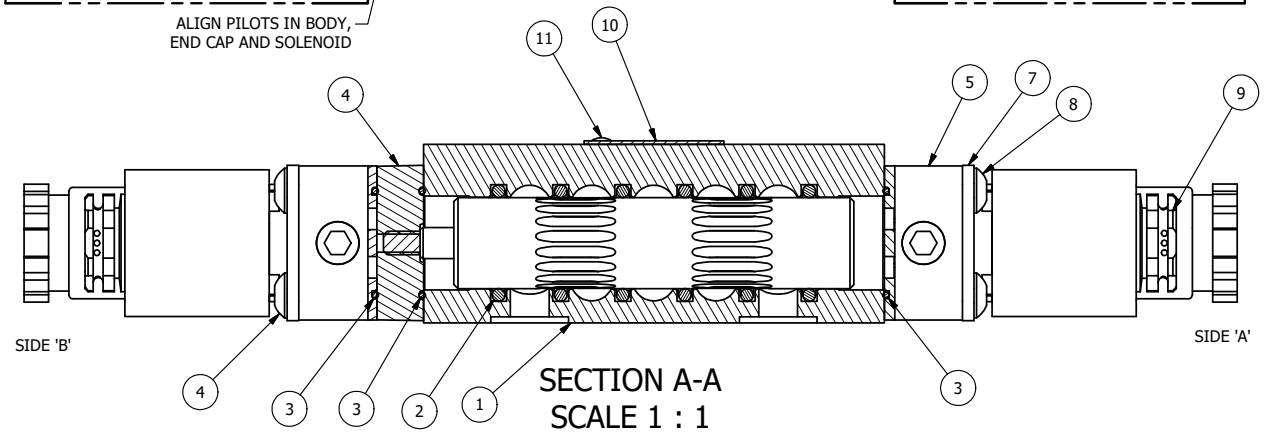

SECTION A-A
SCALE 1 : 1
VIEW FROM 3 PORT SIDE

FLG	QTY	PART NO	DESCRIPTION
12	1	SPK-3	KIT - SUBPLATE MOUNTING, 3/8" SUBPLATE VALVES
11	2	V-212	SCREW, #2 X 3/16 DRIVE, TYPE U, OVAL HEAD, STAINLESS STEEL
10	1	AN-114	NAMEPLATE, BLANK, FOR VALVES WITH SPRINGS OR DETENTS
9	2	V-562	NUT, SOLENOID, SIDE EXHAUST
8	4	V-584	SCREW, 10-24 X 1, BUTTON HEAD SOCKET CAP WITH MICROSPHERE APPLIED TO THREADS.
7	2	SEC3-7	PLATE, RE-INFORCEMENT, SOLENOID, STAMPED, 304 STAINLESS
5	2	V-564	SYSTEM 8 INTRINSICALLY SAFE SOLENOID OPERATOR.
4	1	AY-EMY3G	ASSY - SPR CTR, OPEN CTR SPL, END MOUNT SOLENOID, 1/4" & 3/8" VALVES
4	4	V-601	SCREW, 10-24 X 1-1/2, BUTTON HEAD SOCKET CAP WITH MICROSPHERE ADHESIVE
3	3	EMG3	GASKET - END MOUNT SOLENOID, BUNA-N, 1/4" & 3/8" VALVES
2	6	V-39	O-RING, VITON, STD BODY, 1/4" & 3/8" VALVES
1	1	BP3-1E	BODY - SOLID, BUTTON BLEEDER, ANODIZED, 3/8" SUBPLATE VALVE

NOTES:
1) ALWAYS GIVE VALVE MODEL AND PART NUMBER WHEN ORDERING PARTS.

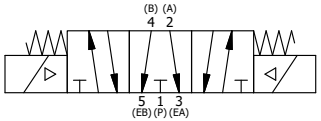

NO.	DATE	REVISION
A	6/1/2018	ECG3 GASKET TO EMG3, CHNGD END CAP GEOM.

LIMITS ON DIMENSIONS UNLESS OTHERWISE SPECIFIED
2-PL DECIMAL ± .01
3-PL DECIMAL ± .005
FRACTIONAL ± 1/64
ANGULAR ± 1/2'

AAA PRODUCTS INTERNATIONAL
7114 Harry Hines Blvd
Dallas, TX 75235

DRAWN: RMcKenna	DATE: 4/7/2016	CHECKED: KWaite	DATE: 4/7/2016
SCALE: 1 : 1	SHEET: 1 OF 1	RELEASED: HWomack	DATE: 4/7/2016

TITLE: 3/8" SUBPLATE, DBL SOL, 3 POS, SPR CTR, FLOAT CTR SPL, INTR SAFE, 24VDC, SIDE VENT

PART NO.: ESY3PGAC 24VDC

REV.: A

D:\Engineering\Product\Valve\Assembly\Standard\ESY3PGAC 24VDC.dwg

THE INFORMATION CONTAINED WITHIN THIS DOCUMENT IS PROPRIETARY TO AAA PRODUCTS AND MAY NOT BE DISCLOSED WITHOUT PRIOR WRITTEN CONSENT